NORLYS VASA DIPSWITCH CCT DS186

AC 220-240V 50-60Hz | IP 65 | IK 08 | LED | DALI2 TD

Vasa DipSwitch CCT
186XX0009
06.11.2026 v.09.7
www.norlys.no

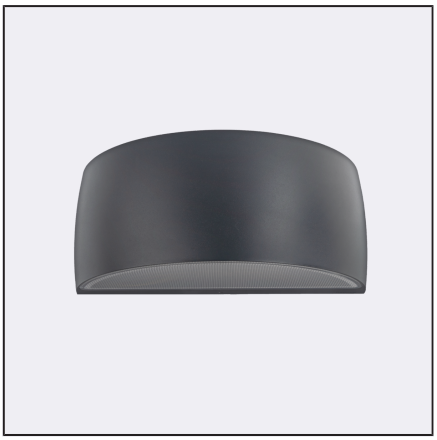

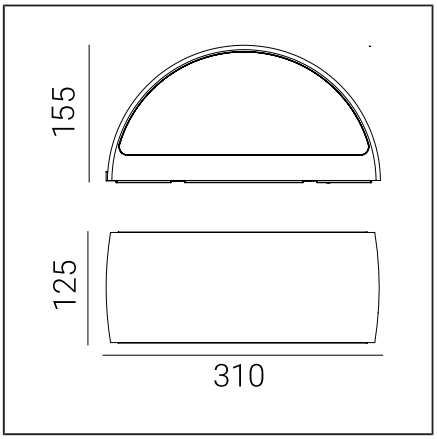

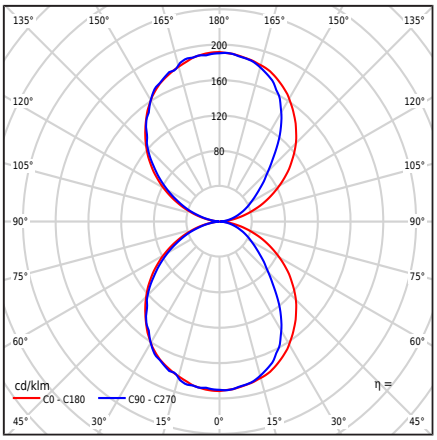

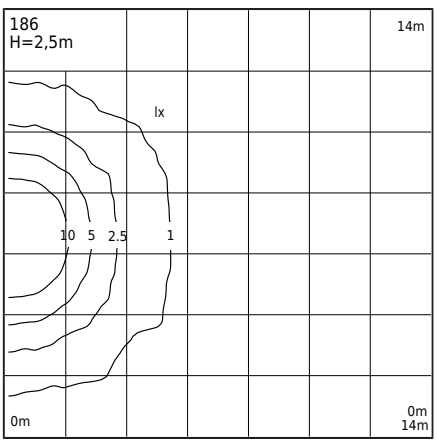

Type of luminaire

Type of luminaire	Wall light,
Photometric body	Double-sided light: directed up and down.
Characteristics of the luminaire	Wide range of applications for the fixture including lighting: wall surfaces and other architectural concepts. 1. Adjustable LED color temperature in the range: - 2700K / 3000K / 4000K - factory setting 3000K - color adjustment via switch on the driver 2. Photometric study of the luminous flux provided for the value - 3000K Other values are provided in the customer manual 3. Possible DALI2 / IEC62386 parts: 101; 102; 207 More information - Sales Department Norlys.

General information

Materials	Powder painted aluminum cast. Lens - transparent polycarbonate with structure, UV stabilized. Silicone gasket. EPDM cable gland.
Mounting method	Fixture mounting: intermediate plate with 2 adjustment holes 5x10mm, 45mm spacing; directly with 2 holes ø5mm, 68mm spacing. According to the included installation instructions. Other accessories must be purchased separately.
Terminal	Connection terminals: max 5x2.5mm², option to connect the fixture in a loop max 5x1.5mm². Cable in a round casing with a diameter of ø7...10.5mm.
Type of light source	LED module, DALI / TD electronic power supply Replaceable (LED only) light source by a professional. Replaceable control gear by a professional.
Light control	Light control in the system: DALI2/TD.
Luminaire weight net / gross	2,28kg / 2,68kg
Box dimensions [cm]	34,5cm x 15cm x 17cm
Luminaire dimensions [cm]	31cm x 12,5cm x 15,5cm

Technical data

LED module	Cree DK251013 J2835B CTW 2700K-3000K-4000K (Datasheet)
Driver	Yes
Driver durability	50000h
External control	DALI2-TD (User manual)
Light source wattage	12,7W
Luminaire wattage	14,6W
Lamp luminous flux	3000K: 1924lm
Luminaire luminous flux	3000K: 974lm
Luminous intensity of the luminaire	3000K: 190cd
ULOR	50%
Color temperature	2700-3000-4000K
Colour consistency (McAdam ellipse)	SDCM3
Flicker of light (Pst LM)	≤1
Strobe effect (SVM)	≤0.4
Colour rendering index CRI	80
L80TM-21 [wg LM-80]	>102 000h
L90 TM-21 [wg LM-80]	>52 600h
Power Factor luminaire	PF: 0,93
Ta Rated temperature	+25°C
Ambient operating temp. range	-20...+45°C
This product contains light source of energy efficiency class D / EPREL	
Inrush current	6.7A/2.4us
BUG rating	B0-U3-G0

Maximum number of luminaires of this type per MCB:

B 10A: 46, B 16A: 74, C 10A: 74, C 16A: 119

Norlys AS
P.B 1014 Hoff, 0218
Oslo
Hovfaret 4B, 0275
Oslo
Norway
+47 24 12 40 11
firmapost@norlys.no

TÜVRheinland CERTIFIED — Management System ISO 9001:2015 IATF 16949:2016 — www.tuv.com ID 9108651873

PCC Cert CERTIFICATE ISO 14001

RoHS 2011/65/UE

Before starting the assembly, please familiarize yourself with the instructions attached to the fixture. Installation and service work should be carried out by individuals with appropriate authorizations and qualifications, in accordance with applicable regulations. Due to the dynamic development of lighting technology, additional information is provided at the customer's request. Condensation that may occur in fixtures is a natural phenomenon and does not deteriorate the quality of the fixture.

VASA DIPSWITCH CCT DS186

Spare parts

99zzx0009	Maintenance kit for lighting fixtures
ZN0901860000	Electrical service kit.

Files to download

Photometric LDT files	Photometric IES files
Manual	BIM ArchiCAD

Indexes

Index	Color	RAL
DS186AL	ALUMINUM	9006
DS186BL	BLACK	9005
DS186CG	CEMENT GREY	7033
DS186CB	COPPER BROWN	8004
DS186CS	CORTEN STEEL	approx. 8011
DS186GM	GRAIN MINERAL	-
DS186GR	GRAPHITE	7016
DS186GB	GREY BEIGE	7006
DS186WH	WHITE	9003

Other colors according to the "Colors Template" / RAL pattern book - available on request, subject to agreement with Norlys' Sales Department.

Norlys AS
P.B 1014 Hoff, 0218
Oslo
Hovfaret 4B, 0275
Oslo
Norway
+47 24 12 40 11
firmapost@norlys.no

Management System ISO 9001:2015 IATF 16949:2016
www.tuv.com ID 9108651873
CERTIFICATE ISO 14001
RoHS 2011/65/UE

Before starting the assembly, please familiarize yourself with the instructions attached to the fixture. Installation and service work should be carried out by individuals with appropriate authorizations and qualifications, in accordance with applicable regulations. Due to the dynamic development of lighting technology, additional information is provided at the customer's request. Condensation that may occur in fixtures is a natural phenomenon and does not deteriorate the quality of the fixture.