NORLYS VASA DIPSWITCH CCT-POWER DS184

Vasa DipSwitch CCT-Power 184XX0009
06.11.2026 v.09.12
www.norlys.no

AC 220-240V 50-60Hz | IP 65 | IK 08 | LED | DIM

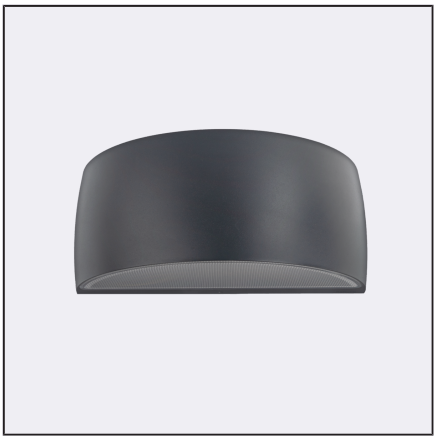

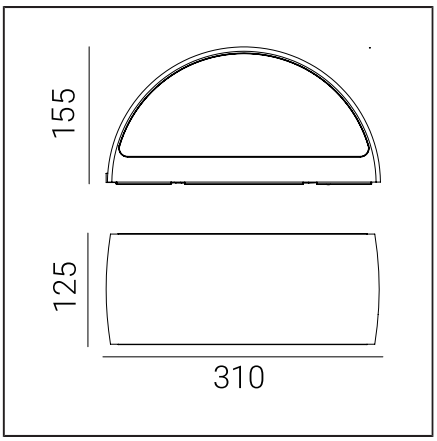

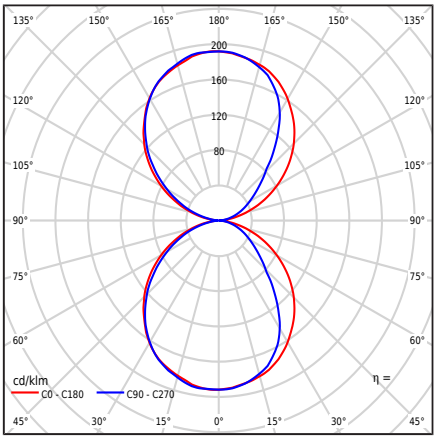

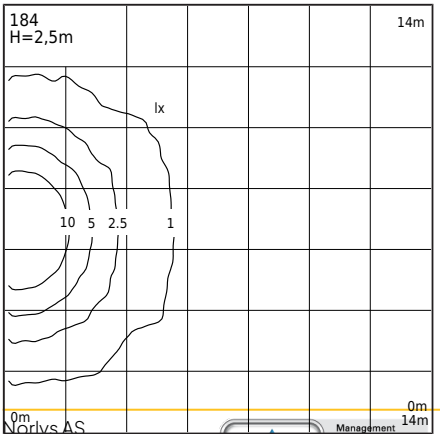

Type of luminaire

Type of luminaire	Wall light,
Photometric body	Double-sided light: directed up and down.
Characteristics of the luminaire	A fixture with a wide range of applications, including lighting: surface areas of walls and other architectural concepts. 1. Adjustable fixture power range: - 7.7W / 10.2W / 12.6W / 15W - factory settings 10.2W/667lm - power adjustment via a switch on the power supply 2. Adjustable LED color range: - 2700K / 3000K / 4000K - factory settings 3000K - color adjustment via a switch on the power supply 3. Photometric testing of luminous flux provided for values: - 3000K - 15W Other values are provided in the customer manual

General information

Materials	Powder painted aluminum cast. Lens - transparent polycarbonate with structure, UV stabilized. Silicone gasket. EPDM cable gland.
Mounting method	Fixture mounting: intermediate plate with 2 adjustment holes 5x10mm, spacing 45mm, direct 2 holes ø5mm, spacing 68mm. According to the enclosed mounting instructions. Other accessories must be purchased separately.
Terminal	Connection terminals: max 3x2.5mm², option to loop fittings max 3x1.5mm². Cable in a round sheath with a diameter of ø7...10.5mm.
Type of light source	LED module, electronic power supply Replaceable (LED only) light source by a professional. Replaceable control gear by a professional.
Light control	Trailing edge (TE) dimming
Luminaire weight net / gross	2,25kg / 2,65kg
Box dimensions [cm]	34,5cm x 15cm x 17cm
Luminaire dimensions [cm]	31cm x 12,5cm x 15,5cm

Norlys AS
P.B 1014 Hoff, 0218
Oslo
Hovfaret 4B, 0275
Oslo
Norway
+47 24 12 40 11
firmapost@norlys.no

TÜVRheinland CERTIFIED
Management System ISO 9001:2015 IATF 16949:2016
www.tuv.com ID 9108651873

PCC Cert CERTIFICATE ISO 14001

RoHS 2011/65/UE

Before starting assembly, you should familiarize yourself with the instructions attached to the fixture. Assembly and service work must be carried out by a person with appropriate authorizations and qualifications, in accordance with applicable regulations. Due to the dynamic development of lighting technology, additional information is provided upon customer request. Condensation that may occur in fixtures is a natural phenomenon and does not affect the deterioration of fixture quality.

VASA DIPSWITCH CCT-POWER DS184



Technical data

LED module	Cree DK251013 J2835B CTW 2700K-3000K-4000K (Datasheet)
Driver	Yes
Driver durability	50000h
External control	Dip Switch CCT-Power 2.7K-3K-4K (User manual)
Light source wattage	6W / 8,2W / 10,4W / 12,7W
Luminaire wattage	7,6W / 10W / 12,4W / max15W
Stanby power (Psb)	0W
Lamp luminous flux	3000K: 1022 / 1334 / 1634 /1924lm
Luminaire luminous flux	3000K: 509 / 677 / 839 / 996lm
Luminous intensity of the luminaire	3000K: 99 / 132 / 164 / 192cd
ULOR	50%
Color temperature	2700-3000-4000K
Colour consistency (McAdam ellipse)	SDCM3
Flicker of light (Pst LM)	≤1
Strobe effect (SVM)	≤0.4
Colour rendering index CRI	80
L80TM-21 [wg LM-80]	>102 000h
L90 TM-21 [wg LM-80]	>52 600h
Power Factor luminaire	PF: 0,85 / 0,90 / 0,92 / 0,94
THD factor	<15%
Overvoltage	2kV
Ta Rated temperature	+25°C
Ambient operating temp. range	-20...+45°C

This product contains light source of energy efficiency class D / EPREL

Optionally, the fixture is also available:
- for emergency installations with DC voltage around 180 ÷ 270 V
- operating mode/dimming: phase dimming; DALI2; 1...10V
- in a version with a motion sensor
- for LED color 2700K [1/0]
- for different luminous flux value
- for a different fixture color (according to the RAL color palette)

Sales conditions and other information, after agreement with Norlys' Sales Department.

Inrush current	5,8A / 40µs
BUG rating	B0-U3-G0

Maximum number of luminaires of this type per MCB:

B 10A: 103, B 16A: 166, C 10A: 166, C 16A: 265

Spare parts

99zzx0009	Maintenance kit for lighting fixtures
ZN0917100601	Electrical service kit.

Files to download

Photometric LDT files	Photometric IES files
Manual	BIM ArchiCAD

Norlys AS
P.B 1014 Hoff, 0218
Oslo
Hovfaret 4B, 0275
Oslo
Norway
+47 24 12 40 11
firmapost@norlys.no

TÜVRheinland CERTIFIED
Management System ISO 9001:2015 IATF 16949:2016
www.tuv.com ID 9108651873
PCC Cert CERTIFICATE ISO 14001
RoHS 2011/65/UE

Before starting assembly, you should familiarize yourself with the instructions attached to the fixture. Assembly and service work must be carried out by a person with appropriate authorizations and qualifications, in accordance with applicable regulations. Due to the dynamic development of lighting technology, additional information is provided upon customer request. Condensation that may occur in fixtures is a natural phenomenon and does not affect the deterioration of fixture quality.

VASA DIPSWITCH CCT-POWER DS184

Indexes

Index	Color	RAL
DS184AL	ALUMINUM	9006
DS184BL	BLACK	9005
DS184CG	CEMENT GREY	7033
DS184CS	CORTEN STEEL	approx. 8011
DS184GM	GRAIN MINERAL	-
DS184GR	GRAPHITE	7016
DS184GB	GREY BEIGE	7006
DS184WH	WHITE	9003

Other colors according to the "Colors Template" / RAL pattern book - available on request, subject to agreement with Norlys' Sales Department.

Norlys AS
P.B 1014 Hoff, 0218
Oslo
Hovfaret 4B, 0275
Oslo
Norway
+47 24 12 40 11
firmapost@norlys.no

Management System ISO 9001:2015 IATF 16949:2016
www.tuv.com ID 9108651873
CERTIFICATE ISO 14001
RoHS 2011/65/UE

Before starting assembly, you should familiarize yourself with the instructions attached to the fixture. Assembly and service work must be carried out by a person with appropriate authorizations and qualifications, in accordance with applicable regulations. Due to the dynamic development of lighting technology, additional information is provided upon customer request. Condensation that may occur in fixtures is a natural phenomenon and does not affect the deterioration of fixture quality.