VASA DIPSWITCH CCT-POWER DM185

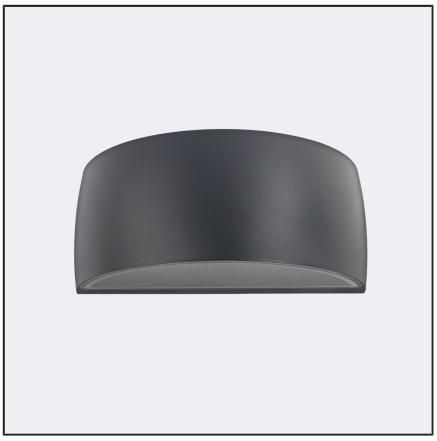

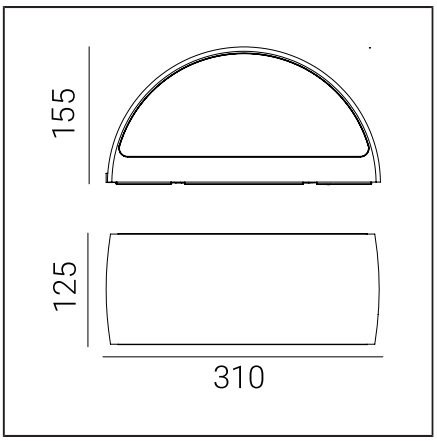

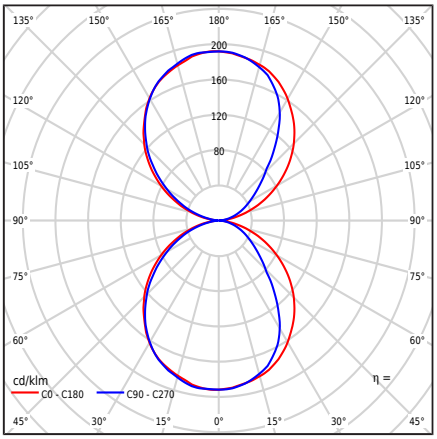

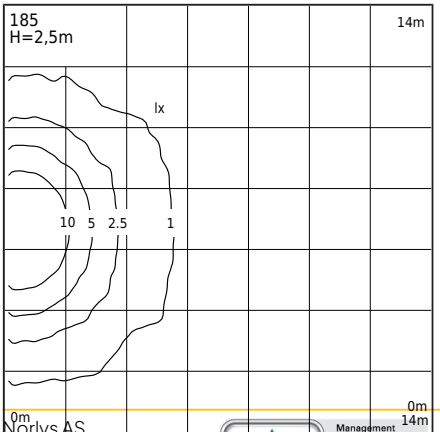

Type of luminaire

Type of luminaire	Wall light,
Photometric body	Double-sided light: directed up and down.
Characteristics of the luminaire	A fixture with a wide range of applications, including lighting: wall surfaces and other architectural concepts. 1. The fixture is equipped with a microwave motion sensor with a twilight switch and motion maintenance. 2. Factory settings of the sensor: - Detection area: 100% - Hold time: 5s - Sensor [lx]: off 3. Before installation, the sensor parameters should be set according to your own assumptions, in accordance with the attached customer instructions. 4. The power of the fixture can be adjusted within the range: - 8.5W / 11W / 13.3W / max 16W - Factory settings 11W/677lm - Power adjustment using a switch on the driver 5. The LED color can be adjusted within the range: - 2700K / 3000K / 4000K - Factory settings 3000K - Color adjustment using a switch on the driver 6. Photometric testing of luminous flux provided for values - 3000K - 16W

General information

Materials	Powder painted aluminum cast. Lens - transparent polycarbonate with structure, UV stabilized. Silicone gasket. EPDM cable gland.
Mounting method	Fixture mounting: intermediate plate with 2 adjustable holes 5x10mm, spacing 45mm, directly 2 holes ø5mm, spacing 68mm. According to the attached installation instructions. Other accessories should be purchased separately.
Terminal	Terminal blocks: max 3x2.5mm², possibility to loop fixture connections max 3x1.5mm². Cable in a round jacket with a diameter of ø7...10.5mm.
Type of light source	LED module, power supply, microwave motion sensor MD HF Replaceable (LED only) light source by a professional. Replaceable control gear by a professional.
Light control	A luminaire equipped with a microwave motion sensor, twilight switch, and MD HF motion hold function.
Luminaire weight net / gross	2,29kg / 2,69kg
Box dimensions [cm]	34,5cm x 15cm x 17cm
Luminaire dimensions [cm]	31cm x 12,5cm x 15,5cm

Norlys AS
P.B 1014 Hoff, 0218
Oslo
Hovfaret 4B, 0275
Oslo
Norway
+47 24 12 40 11
firmapost@norlys.no

TÜVRheinland CERTIFIED
Management System ISO 9001:2015 IATF 16949:2016
www.tuv.com ID 9108651873
PCC Cert CERTIFICATE ISO 14001
RoHS 2011/65/UE

Before beginning the assembly, familiarize yourself with the instructions attached to the luminaire. Assembly and servicing work is conducted by a person with the appropriate authorizations and qualifications, in accordance with applicable regulations. Due to the dynamic development of lighting technology, additional information is provided at the customer's request. Condensation that may occur in luminaires is a natural phenomenon and does not affect the deterioration of the luminaire's quality.

VASA DIPSWITCH CCT-POWER DM185

Technical data

LED module	Cree DK251013 J2835B CTW 2700K-3000K-4000K (Datasheet)
Driver	Yes
Driver durability	50000h
External control	Microwave motion sensor MD HF MC119S (User manual)
Light source wattage	6W / 8,2W / 10,4W / 12,7W
Luminaire wattage	8,5W / 11W / 13,3W / max16W
Stanby power (Psb)	0,1W
Lamp luminous flux	3000K: 1022 / 1334 / 1634 / 1924lm
Luminaire luminous flux	3000K: 509 / 677 / 839 / 996lm
Luminous intensity of the luminaire	3000K: 99 / 132 / 164 / 192cd
ULOR	50%
Color temperature	2700-3000-4000K
Colour consistency (McAdam ellipse)	SDCM3
Flicker of light (Pst LM)	≤1
Strobe effect (SVM)	≤0.4
Colour rendering index CRI	80
L80TM-21 [wg LM-80]	>102 000h
L90 TM-21 [wg LM-80]	>52 600h
Power Factor luminaire	PF: 0,81 / 0,87 / 0,90 / 0,93
THD factor	<15%
Overvoltage	2kV
Ta Rated temperature	+25°C
Ambient operating temp. range	-20...+45°C
This product contains light source of energy efficiency class D / EPREL	
Inrush current	5,8A / 40µs
BUG rating	B0-U3-G0

Maximum number of luminaires of this type per MCB:

B 10A: 103, B 16A: 166, C 10A: 166, C 16A: 265

Spare parts

99zx0009	Maintenance kit for lighting fixtures
ZN0901850000	Electrical service kit.

Files to download

Photometric LDT files	Photometric IES files
Manual	BIM ArchiCAD

Indexes

Index	Color	RAL
DM185AL	ALUMINUM	9006
DM185BL	BLACK	9005
DM185CG	CEMENT GREY	7033
DM185CB	COPPER BROWN	8004
DM185CS	CORTEN STEEL	approx. 8011
DM185GM	GRAIN MINERAL	-
DM185GR	GRAPHITE	7016
DM185GB	GREY BEIGE	7006
DM185WH	WHITE	9003

Other colors according to the "Colors Template" / RAL pattern book - available on request, subject to agreement with Norlys' Sales Department.

Norlys AS
P.B 1014 Hoff, 0218
Oslo
Hovfaret 4B, 0275
Oslo
Norway
+47 24 12 40 11
firmapost@norlys.no

Management System ISO 9001:2015 IATF 16949:2016
www.tuv.com ID 9108651873

Before beginning the assembly, familiarize yourself with the instructions attached to the luminaire. Assembly and servicing work is conducted by a person with the appropriate authorizations and qualifications, in accordance with applicable regulations. Due to the dynamic development of lighting technology, additional information is provided at the customer's request. Condensation that may occur in luminaires is a natural phenomenon and does not affect the deterioration of the luminaire's quality.