NORLYS ARVIKA 890

AC 220-240V 50-60Hz | IP 44 | G12

Arvika 890XX0009
27.02.2026 v.09.2
www.norlys.no

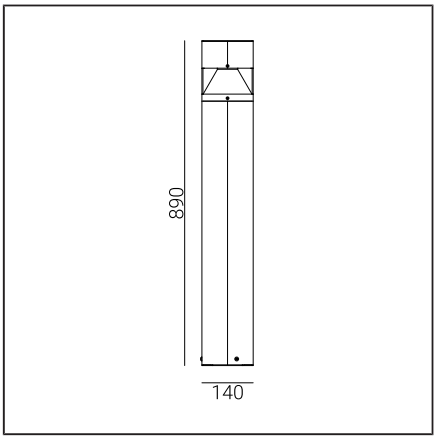

Type of luminaire

Type of luminaire	Post light fixture.
Photometric body	Four side light distribution covered from the top.
Characteristics of the luminaire	Bollard light for illuminating private areas and public zones.

General information

Materials	Hot-dip galvanized steel. Powder painted steel. Lens - clear polycarbonate, UV stabilized. Silicone gasket.
Mounting method	Fixture mounting: 3 holes ø9mm on diameter ø85mm every 120°. A mounting anchor for embedding in concrete is included with the fixture.
Terminal	Connection terminals: max 3x4mm², possibility of connecting the fixture in a loop max 3x2.5mm². Cable in a round jacket with a maximum diameter of ø12.5mm.
Type of light source	G12 lamp, electronic ballast
Light control	Non-dimmable fixture
Luminaire weight net	9,36kg
Box dimensions [cm]	15cm x 15cm x 91cm

Technical data

Lamp G12	Yes
Light source wattage	35W
Lamp luminous flux	3150...4300lm
ULOR	0%
Power Factor luminaire	PF > 0,9
Ambient operating temp. range	Ta max=+65°C

Lanterne pour l'éclairage des zones privées et des espaces publics.

Accessories sold separately

208ZX0009	Concreting anchor
207GA0010	Adapter for concrete foundation

Recommended light sources

Philips Master Colour CDM-T 35W G12	Osram Powerball HCI-T 35W G12

Spare parts

06890003	Lampshade - service kit
08890000	Gasket.
46100002	Electronic ballast.

Files to download

Manual

Indexes

Index	Color	RAL
890BL	BLACK	9005
890GA	HOT-DIP GALVANIZING	-

Other colors according to the "Colors Template" pattern book - available on request, subject to agreement with Norlys' Sales Department.

Norlys AS
P.B 1014 Hoff, 0218
Oslo
Hovfaret 4B, 0275
Oslo
Norway
+47 24 12 40 11
firmapost@norlys.no

TÜVRheinland CERTIFIED
Management System ISO 9001:2015 IATF 16949:2016
www.tuv.com ID 9108651873
PCC cert CERTIFICATE ISO 14001
RoHS 2011/65/UE

Before starting the installation, please read the instructions attached to the fixture.
Due to the dynamic development of lighting technology, we provide additional information upon customer request.
Recommended light source information is based on manufacturers' data from 2016. We do not guarantee the completeness and validity of the offer; therefore, we refer to the current technical information from the light source manufacturers.
Condensation that may occur in fixtures is a natural phenomenon and does not affect the quality of the fixture.