NORLYS MOSS 6753

AC 220-240V 50-60Hz | IP 65 | IK 06 | LED | DIM

Moss 6753XX0309
16.09.2026 v.09.7
www.norlys.no

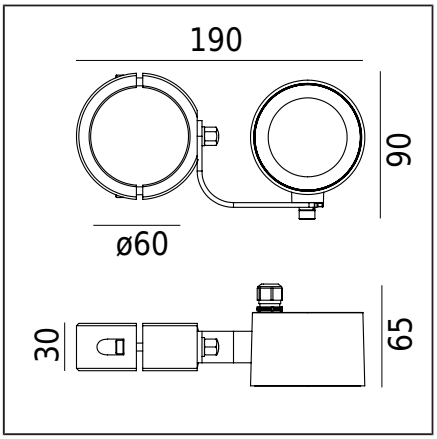

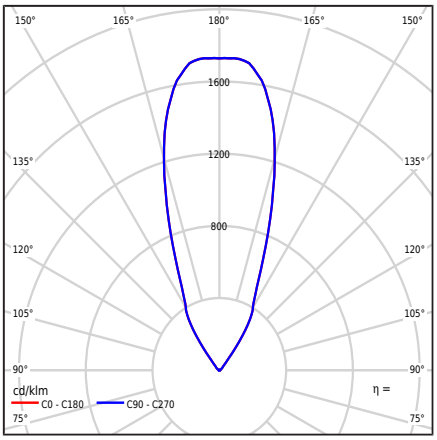

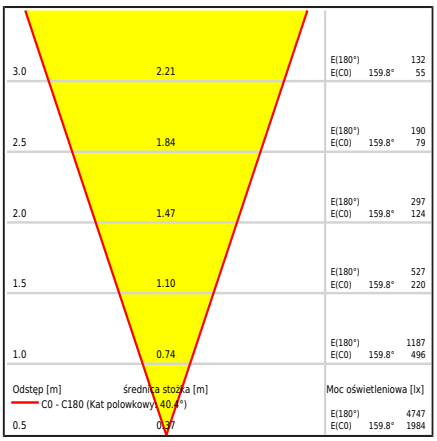

Type of luminaire

Type of luminaire	Reflector type luminaire.
Photometric body	Symmetric light with 36D beam angle.
Characteristics of the luminaire	For illuminating gardens, private areas and other architectural concepts. Possibility to adjust the direction of light also in the vertical plane.

General information

Materials	Powder painted aluminum cast. Lampshade - safety glass, transparent.
Mounting method	Mounting of the luminaire: clamp for a Ø60 pole Set includes: Art.6435 - clamp Ø60 Art.6701 - luminaire
Terminal	The luminaire is equipped with a 3m long H05RN-F 3G1 cable. To be connected in an appropriately selected electrical installation box
Type of light source	LED module AC integrated Replaceable (LED only) light source by a professional.
Light control	Phase-dimming (TRIAC) TRAILING EDGE (TE) - LEADING EDGE (LE)
Luminaire weight net / gross	1kg / 1kg

Technical data

LED module	Lumens EDC 38C 8W xxx 230V A101 3K (Datasheet)
External control	Phase dimmer Lumens LED AC (User manual)
Light source wattage	8W
Luminaire wattage	8,4W
Lamp luminous flux	840lm
Luminaire luminous flux	687lm
Efficiency of the luminaire	81,8lm/W
ULOR	100%
Color temperature	3000K
Colour consistency (McAdam ellipse)	SDCM3
Colour rendering index CRI	80
L70TM-21 [wg LM-80]	59 000h
LED photobiological threat	RG0 or RG1
Power Factor luminaire	PF>0,98
THD factor	<20%
Ta Rated temperature	+25°C
Ambient operating temp. range	-20...+45°C

This product contains light source of energy efficiency class E / EPREL

Optional luminaire also available:
- For LED color 2700K [1/1]
- For 15D and 24D beam angles
- For a different color of the luminaire (according to the RAL color palette)

Terms of sale and other information, after contact with the Norlys Sales Department.

Inrush current	35mA / 60ms
BUG rating	B1-U0-G0

Accessories sold separately

6434XX0009	Clamp
6435XX0009	Clamp
6436XX0009	Clamp
6729XX0009	Mounting adapter
145ZX0009	Connection box

Files to download

Photometric LDT files	Photometric IES files
Manual	

Norlys AS
P.B 1014 Hoff, 0218
Oslo
Hovfaret 4B, 0275
Oslo
Norway
+47 24 12 40 11
firmapost@norlys.no

TÜVRheinland CERTIFIED
Management System ISO 9001:2015 IATF 16949:2016
www.tuv.com ID 9108651873

PCC cert CERTIFICATE ISO 14001

RoHS 2011/65/UE

Before the installation, please read the instructions included with the luminaire. Due to the dynamic development of lighting technology, we provide additional information upon customer request. The LED module can only be replaced by a professional Norlys service. Condensation that may occur in luminaires is a natural phenomenon and does not affect the quality of the luminaire.

Indexes

Index	Color	RAL
6753BL	BLACK	9005

Other colors according to the "Colors Template" pattern book - available on request, subject to agreement with Norlys' Sales Department.

Norlys AS
P.B 1014 Hoff, 0218
Oslo
Hovfaret 4B, 0275
Oslo
Norway
+47 24 12 40 11
firmapost@norlys.no

Management System ISO 9001:2015 IATF 16949:2016
www.tuv.com ID 9108651873

CERTIFICATE ISO 14001

RoHS 2011/65/UE

Before the installation, please read the instructions included with the luminaire. Due to the dynamic development of lighting technology, we provide additional information upon customer request. The LED module can only be replaced by a professional Norlys service. Condensation that may occur in luminaires is a natural phenomenon and does not affect the quality of the luminaire.