NORLYS TRYSIL 1101

IP 65 | IK 08 | LED | DIM | AC 220-240V 50-60Hz



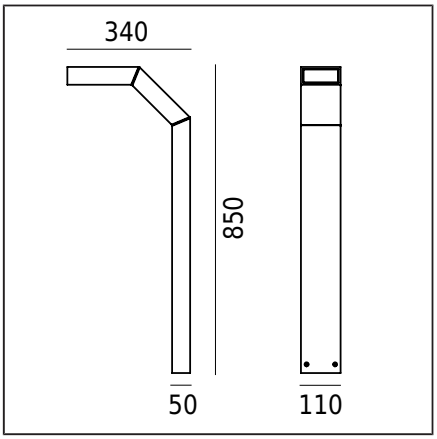

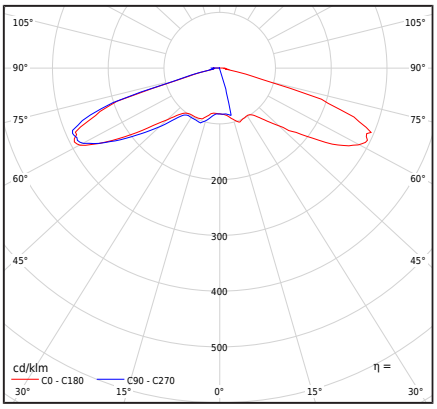

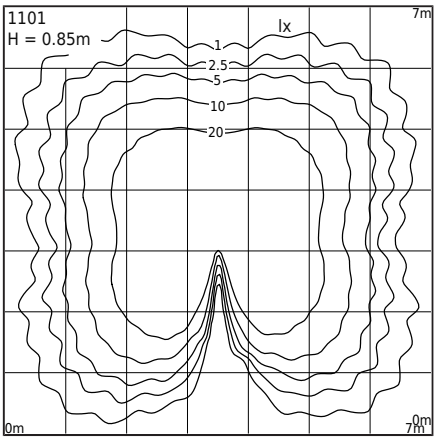

Type of luminaire

Type of luminaire	Post light fixture.
Photometric body	Lens from Ledil type VSM (IESNA type V)
Characteristics of the luminaire	Luminaire with a contemporary design For lighting gardens, private areas and other architectural concepts

General information

Materials	Extruded aluminum profile, powder coated. The outer hermetic lens - transparent PMMA plastic Silicone gasket.
Mounting method	Mounting of the luminaire : 4 holes ø8mm, spacing 18x50mm According to the attached assembly instructions Other accessories must be purchased separately
Terminal	Connection terminals: max 3x2.5mm² Possibility of connecting the luminaire in loops of max. 3x1.5mm² Round insulated cable with a maximum diameter of ø12.5 mm
Type of light source	Optical kit with IP67 (LED module and lens); electronic power supply Replaceable (LED only) light source by a professional. Replaceable control gear by a professional.
Light control	Trailing edge (TE) dimming
Luminaire weight net / gross	4,2kg / 5kg
Box dimensions [cm]	39,5cm x 13cm x 94,5cm
Luminaire dimensions [cm]	34cm x 11cm x 85cm

Technical data

LED module	Cree DK200402 V1 XTE-HE 3V 4K. (Datasheet)
Driver	Yes
Driver durability	50000h
External control	Philips Xitanium TE (User manual)
Light source wattage	5,8W
Luminaire wattage	7,4W
Lamp luminous flux	828lm
Luminaire luminous flux	694,8lm
Efficiency of the luminaire	93,9lm/W
ULOR	0%
Color temperature	4000K
Colour consistency (McAdam ellipse)	SDCM3
Colour rendering index CRI	80
L90 TM-21 [wg LM-80]	109 000h
Power Factor luminaire	PF 0,95
THD factor	20%
Ta Rated temperature	+25°C
Ambient operating temp. range	-20...+45°C

This product contains light source of energy efficiency class A G / EPREL

Possibility to mount other types of lenses
The order completion date after contact with the Sales Department of Norlys Sp. z o.o.

Inrush current	3,36A/36µs
BUG rating	B1-U1-G1

Accessories sold separately

1907ZX0009	Concreting anchor

Spare parts

ZS1101zx0009	Repair kit.

Files to download

Photometric LDT files	Photometric IES files
Manual	

Norlys AS
P.B 1014 Hoff, 0218
Oslo
Hovfaret 4B, 0275
Oslo
Norway
+47 24 12 40 11
firmapost@norlys.no

TÜVRheinland CERTIFIED
Management System ISO 9001:2015 IATF 16949:2016
www.tuv.com ID 9108651873
PCC Cert CERTIFICATE ISO 14001
RoHS 2011/65/UE

Before the assembly, read the instructions attached to the luminaire. Installation and service work is carried out by a person with appropriate authorizations and qualifications, in accordance with applicable regulations. Due to the dynamic development of lighting technology, we provide additional information on request. Condensation that may occur in the luminaires is a natural phenomenon and does not affect the quality of the luminaire.

TRYSIL 1101

Indexes

Index	Color	RAL
1101AL	ALUMINUM	9006
1101BL	BLACK	9005
1101GR	GRAPHITE	7016

Other colors according to the "Colors Template" / RAL pattern book - available on request, subject to agreement with Norlys' Sales Department.

Norlys AS
P.B 1014 Hoff, 0218
Oslo
Hovfaret 4B, 0275
Oslo
Norway
+47 24 12 40 11
firmapost@norlys.no

Before the assembly, read the instructions attached to the luminaire. Installation and service work is carried out by a person with appropriate authorizations and qualifications, in accordance with applicable regulations. Due to the dynamic development of lighting technology, we provide additional information on request. Condensation that may occur in the luminaires is a natural phenomenon and does not affect the quality of the luminaire.