NORLYS TRYSIL 1097

IP 65 | IK 10 | AC 220-240V 50-60Hz | LED | DIM

Trysil 1097XX0009
14.10.2026 v.09.10
www.norlys.no



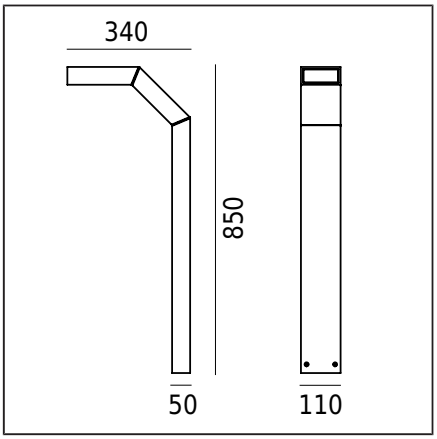

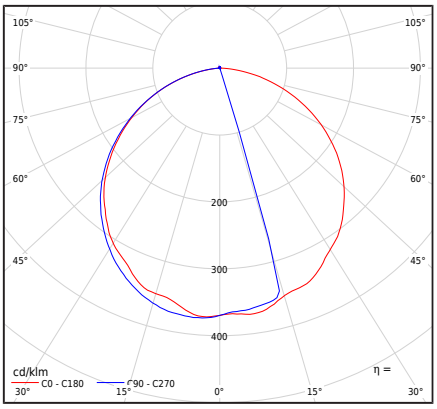

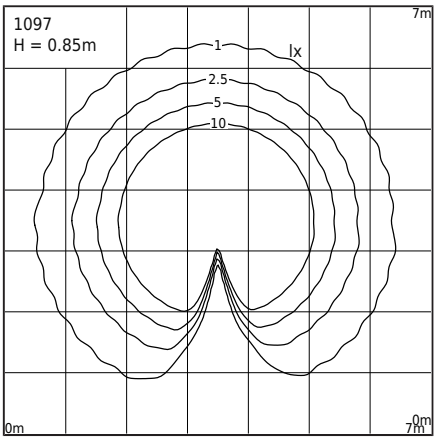

Type of luminaire

Type of luminaire	Post light fixture.
Photometric body	Downward-directed light.
Characteristics of the luminaire	A fixture with contemporary design. For lighting gardens, private areas, and other architectural applications.

General information

Materials	Powder painted aluminum cast. Lens - transparent polycarbonate with structure, UV stabilized. Silicone gasket.
Mounting method	Luminaire mounting: 4 holes ø8mm, spacing 18x50mm. According to the attached installation instructions. Other accessories must be purchased separately.
Terminal	Connection terminals: max 3x2.5mm², possibility of connecting the luminaire in a loop max 3x1.5mm². Round cable with a maximum diameter of ø12.5mm.
Type of light source	LED module, electronic power supply Replaceable (LED only) light source by a professional. Replaceable control gear by an end-user.
Light control	Trailing edge (TE) dimming
Luminaire weight net / gross	4,2kg / 5kg
Box dimensions [cm]	39,5cm x 13cm x 94,5cm
Luminaire dimensions [cm]	34cm x 11cm x 85cm

Technical data

2 LED modules	Cree DK180501 V8 JB2835 3V 4K (Datasheet)
Driver	Yes
Driver durability	50000h
External control	Philips Xitanium TE (User manual)
Light source wattage	5,6W
Luminaire wattage	7,3W
Lamp luminous flux	1069lm
Luminaire luminous flux	647lm
Efficiency of the luminaire	88,6lm/W
ULOR	0%
Color temperature	4000K
Colour consistency (McAdam ellipse)	SDCM3
Flicker of light (Pst LM)	≤1
Strobe effect (SVM)	≤0.4
Colour rendering index CRI	80
L80TM-21 [wg LM-80]	102 000h
L90 TM-21 [wg LM-80]	52 600h
Power Factor luminaire	PF 0,97
THD factor	20%
Ta Rated temperature	+25°C
Ambient operating temp. range	-20...+45°C

This product contains light sources of energy efficiency class C / EPREL

Optionally, the fixture is also available:
- For LED color 2700K [1/1]
- For a different fixture color (according to the RAL color palette)
- For a different fixture height

Terms of sale and other information can be obtained after consultation with the Norlys Sales Department.

Inrush current	1A / 15,2µs
BUG rating	B0-U1-G0

Accessories sold separately

1907ZX0009	Concreting anchor

Spare parts

ZS1097zx0009	Repair kit.

Norlys AS
P.B 1014 Hoff, 0218
Oslo
Hovfaret 4B, 0275
Oslo
Norway
+47 24 12 40 11
firmapost@norlys.no

TÜVRheinland CERTIFIED — Management System ISO 9001:2015 IATF 16949:2016 — www.tuv.com ID 9108651873

PCC Cert CERTIFICATE ISO 14001

RoHS 2011/65/UE

Before starting the installation, please read the manual included with the fixture. Installation and maintenance work should be carried out by a person with appropriate authorizations and qualifications, in accordance with applicable regulations. Due to the dynamic development of lighting technology, additional information is provided upon the client's request. Condensation that may occur in the fixtures is a natural phenomenon and does not impair the quality of the fixture.

TRYSIL 1097



Trysil 1097XX0009
14.10.2026 v.09.10
www.norlys.no

Files to download

Photometric LDT files	Photometric IES files
Manual	

Indexes

Index	Color	RAL
1097AL	ALUMINUM	9006
1097BL	BLACK	9005
1097GR	GRAPHITE	7016

Other colors according to the "Colors Template" / RAL pattern book - available on request, subject to agreement with Norlys' Sales Department.

Norlys AS
P.B 1014 Hoff, 0218
Oslo
Hovfaret 4B, 0275
Oslo
Norway
+47 24 12 40 11
firmapost@norlys.no

Management System ISO 9001:2015 IATF 16949:2016
TÜVRheinland CERTIFIED
www.tuv.com ID 9108651873
PCC Cert CERTIFICATE ISO 14001
RoHS 2011/65/UE

Before starting the installation, please read the manual included with the fixture. Installation and maintenance work should be carried out by a person with appropriate authorizations and qualifications, in accordance with applicable regulations. Due to the dynamic development of lighting technology, additional information is provided upon the client's request. Condensation that may occur in the fixtures is a natural phenomenon and does not impair the quality of the fixture.